Calculate perimeter

1 Calculate the perimeter of each shape.

a)

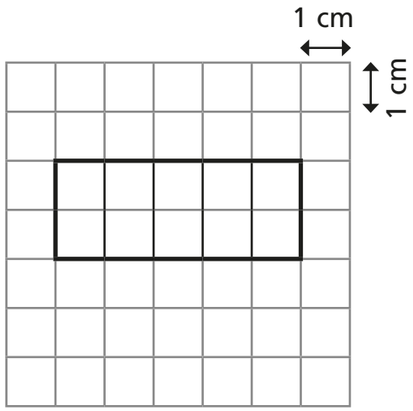

c)

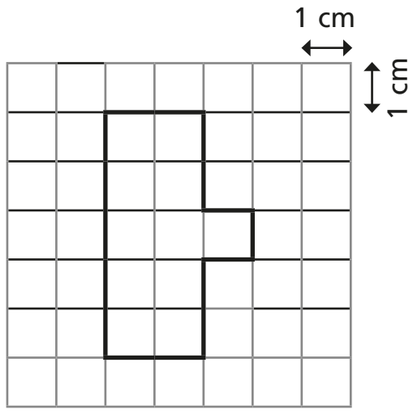

b)

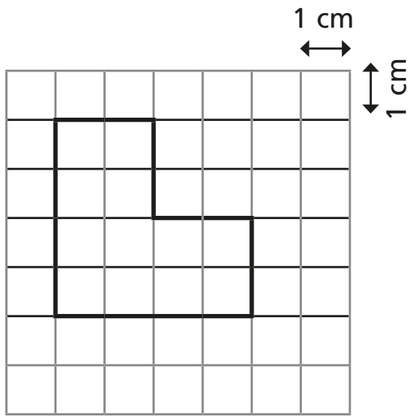

d)

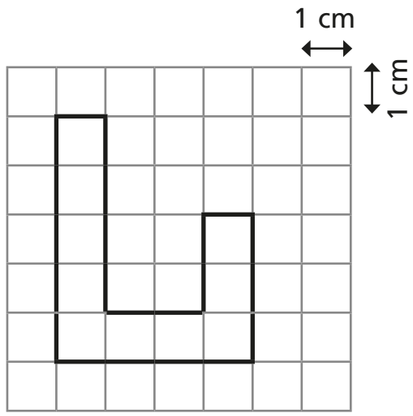

2 Calculate the perimeter of these shapes.

a)

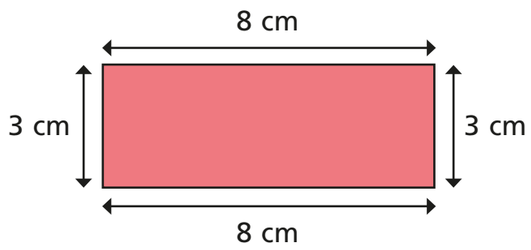

b)

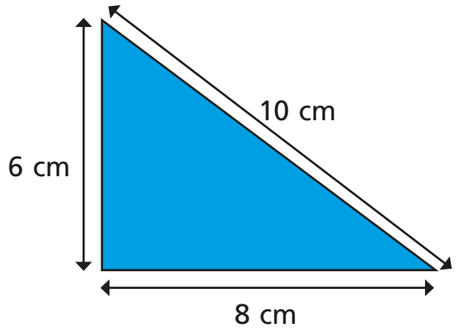

3 Calculate the perimeter of these shapes.

a)

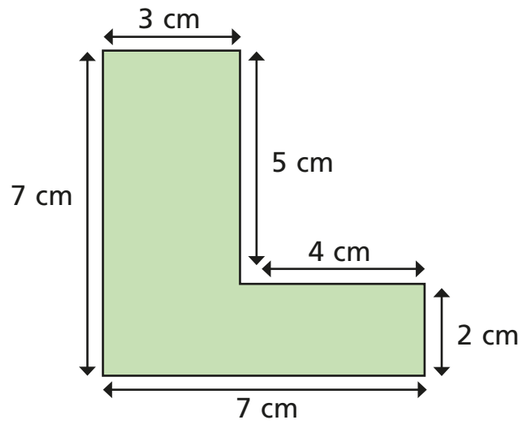

b)

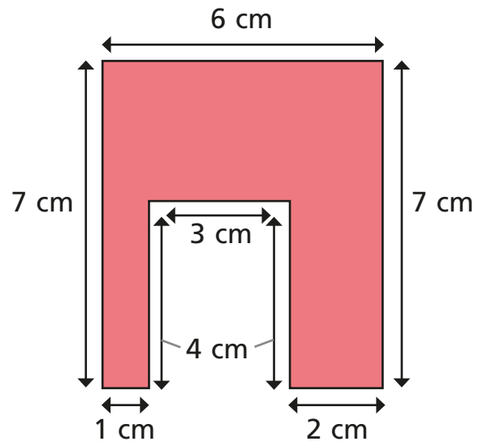

© White Rose Maths 2019

4 Work out the missing lengths on these shapes.

a)

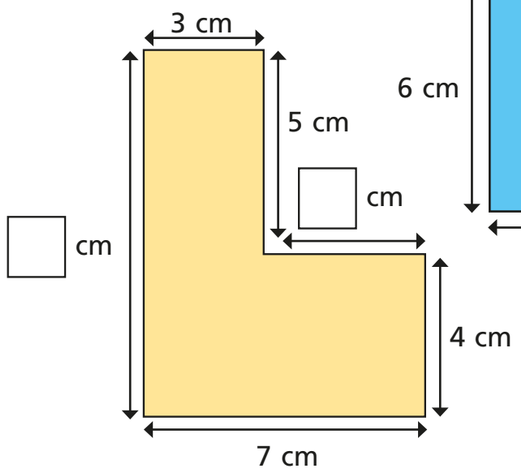

b)

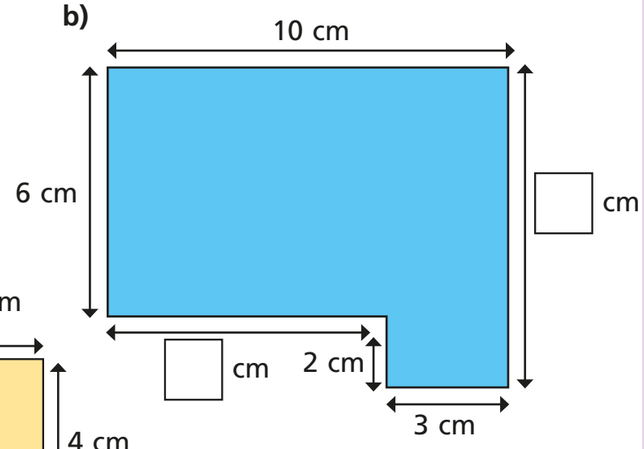

Discuss with a partner how you worked them out.

5 Calculate the perimeter of these shapes.

a)

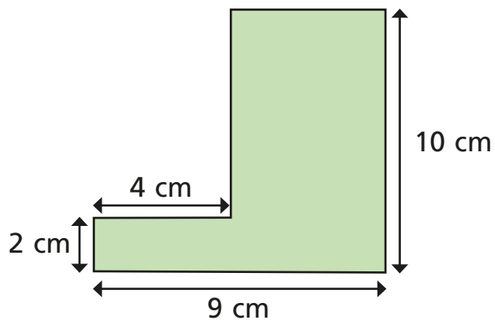

b)

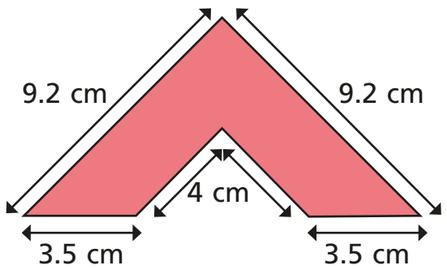

6 Mo thinks that there is not enough information to calculate the perimeter of the shape.

Is he correct? How do you know?

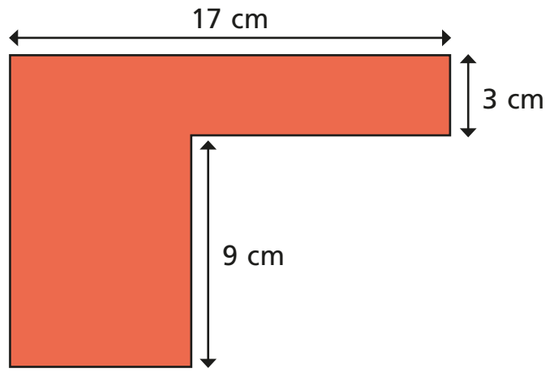

7 Rosie is making shapes made up of 3 rectangles.

Each rectangle has a length of 10 cm and a width of 4 cm.

She makes these 2 shapes.

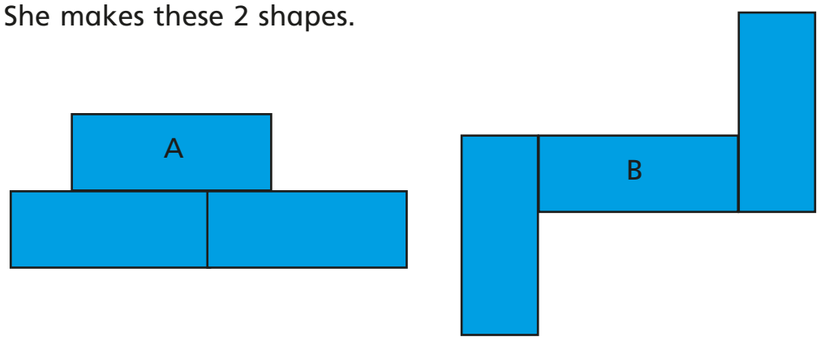

a) Which shape has the greatest perimeter? _____

b) What other shapes can you make with 3 rectangles?

What is the perimeter of the shapes?

© White Rose Maths 2019